Software Defined Radio (SDR) for Amateur Radio – An Overview

Steve Dick, K1RF

February 11, 2015

Comm Center
100 Fairfield Ave
Norwalk, CT

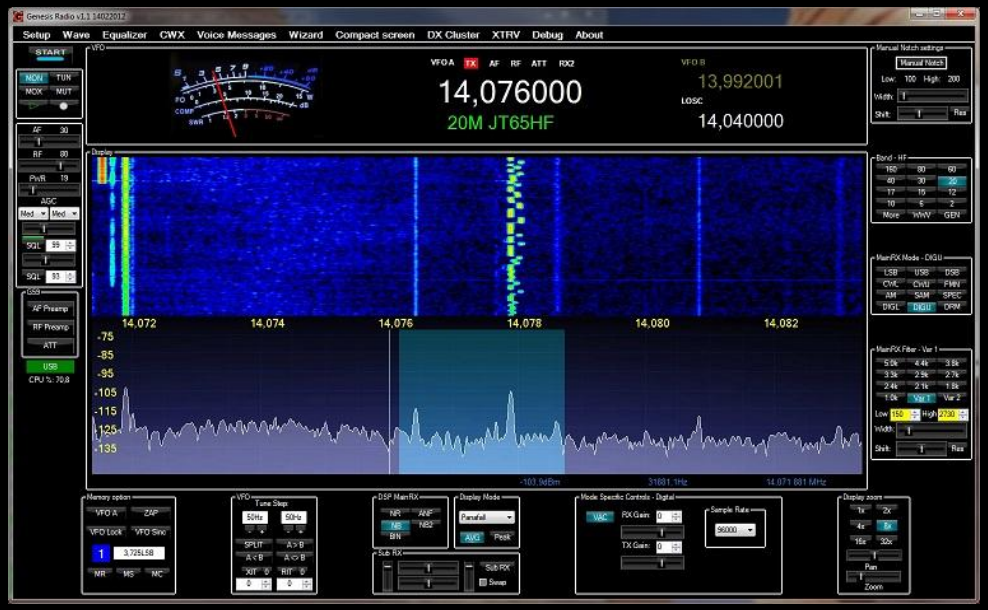

What is Software Defined Radio?
Software Defined Radio replaces most hardware functions with software programmed functions

- Operator interface can replace knobs and switches with a graphical user interface. GUI can be readily updated. Often includes spectrum display, waterfall display, click to select operating frequency, modes, band, filters, etc. But some recent SDRs still have knobs and switches
- Modulation and demodulation: New modes can be easily added
- Programmable Digital signal processing functions: Filtering (programmable filter widths, and shapes, IF offset, etc) AGC, ANL, special filters such as tracking notch filter etc
- A list of ~70 software defined radios can be found at: http://en.wikipedia.org/wiki/List_of_software-defined_radios

The radio can be completely redefined in the field through modification of software

Look and feel of Software Defined Radio

- May not look or feel like a conventional radio. Often uses a computer-based graphical user interface. No knobs or switches!!!
- Getting the software set up and working properly can be a challenge. It is definitely not plug and play and requires integrating multiple software packages. Some newer SDR radios have built-in processing which eliminates this problem.
- There are processing time lags on a P.C. if used for the DSP processing (on the order of milliseconds). This is generally not a problem except when sending Morse Code (CW) and trying to monitor your own transmitted signal. Your brain gets confused from the time lag. A separate tone source with zero lag solves this problem.
- You often can't receive signals at the center of the spectrum, depending on design and system configuration. A lot of noise can be picked up in this part of the spectrum (60 cycle hum, noise due to ground loops, etc) so you tune on either side of the spectrum center.

Typical SDR Graphical User Interface

HDSDR – compatible with most SDR hardware

Waterfall display uses changing color for signal strength. Can see very weak signals

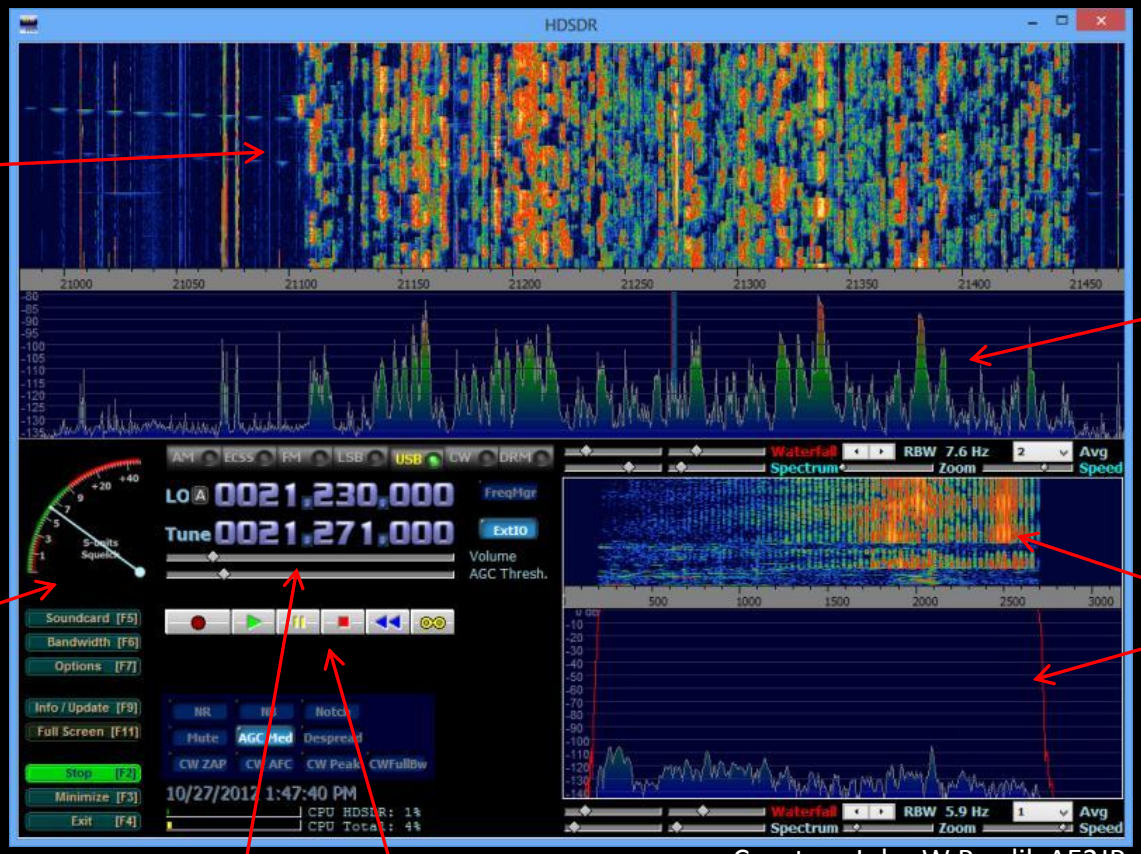

Courtesy John W Pawlik AE2JP

Spectrum display shows amplitude vs frequency

S-meter

Expanded scale

Record/playback

Frequency readout of local oscillator (center frequency) and tuned frequency

Direct Conversion Receiver

If a low IF makes it easier to implement a good "roofing" or first I.F. filter, why not go down to an IF of zero frequency?

Direct Conversion Receiver Block Diagram

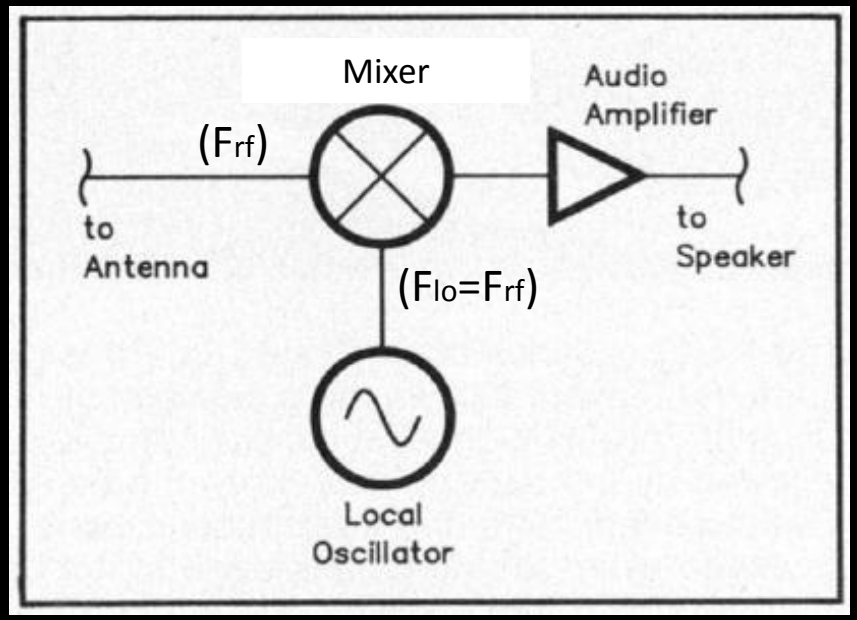

See QST, August 1992, "High Performance Direct Conversion Receivers "
by Rick Campbell, KK7B

Characteristics:

- First described by Colebrook in 1924
- Very simple circuit
- Easy filtering - performed at audio frequencies
- Very clean sounding (see next slide)
- Problems:
  - Has an audio image
  - Can receive CW and SSB but not AM or FM
  - Subject to hum and noise pickup without very careful design
  - Local oscillator can cause leakage into mixer resulting in DC offset and/or coupling to antenna, causing interference

Reciprocal Mixing

First reported on by ARRL in QST in review of Yaesu-450, December 2007

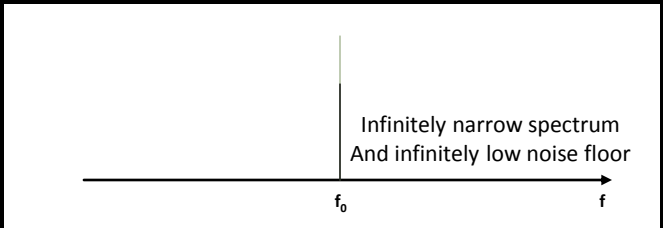

Ideal spectrum of an oscillator

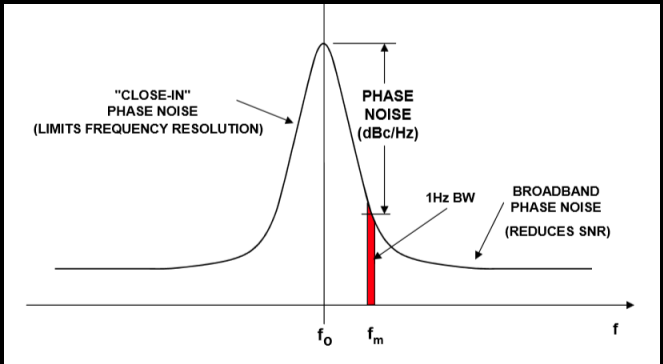

Actual spectrum of an oscillator

- "Reciprocal Mixing must be seriously considered while evaluating the overall performance of a receiver. In fact, it is probably the most significant figure in receiver performance! "

  "Reciprocal mixing is noise that is generated in a super-heterodyne receiver when noise from the local oscillator mixes with strong, adjacent signals. "

  Bob Allison, WB1GCM
  ARRL Test Engineer

- The more conversions a receiver has, the more chances for reciprocal mixing degradation due to multiple oscillators' phase noise contributions.

Direct conversion receivers use a single oscillator and tend to have good reciprocal mixing specs and "sound" very clean. Reciprocal mixing noise in a direct sampling SDR is an indicator of the Analog to Digital Converter (ADC) clock's spectral purity.

Some examples of low phase noise oscillators

- SI570 used in many QSD receivers including the Elecraft KX3
- (10-160MHz CMOS) $13.11 and up from digikey.com depending on interface type and frequency range

Typical CLK± Output Phase Noise

Offset Frequency (f)	120.00 MHz LVDS
100 Hz	–112
1 kHz	–122
10 kHz	–132
100 kHz	–137
1 MHz	–144
10 MHz	–150
100 MHz	n/a

Very good performance for variable frequency oscillator (XTAL + DSPLL)

- Crystek CVHD-37X $24.34 from digikey.com for 122.88MHz used in ANAN-100D direct sampling transceiver phase locked to 10 MHz TCXO.

Phase Noise (Typical):

10 Hz Offset:	-75 dBc/Hz
100 Hz Offset:	-100 dBc/Hz
1 kHz Offset:	-130 dBc/Hz
10 kHz Offset:	-145 dBc/Hz
100 kHz Offset:	-155 dBc/Hz
1 MHz Offset:	-160 dBc/Hz
10 MHz Offset:	-160 dBc/Hz

Excellent performance for a fixed frequency voltage controlled crystal oscillator

- Low cost programmable oscillator: **Adafruit Si5351A Clock Generator Breakout Board - 8KHz to 160MHz with 3 independent clock outputs, I2C control $7.95 includes crystal, LDO regulator, I2C level shifter, Provided software. The chip alone is only $1.34 at Digikey!!**

See http://nt7s.com/ for phase noise measurements and other investigations of the Si5351A

A real bargain with reasonable phase noise

Prices are reasonable for some integrated, low phase noise oscillators

Image Reject Mixers

Let's remove that pesky image in the direct conversion receiver

Basic architectures

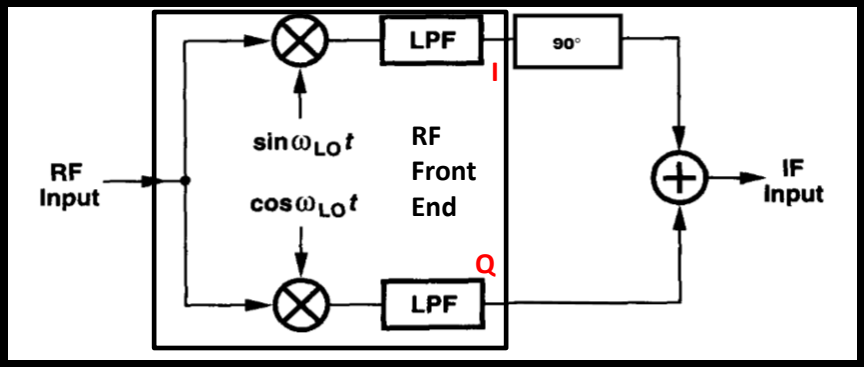

Patented by R. Hartley 1928

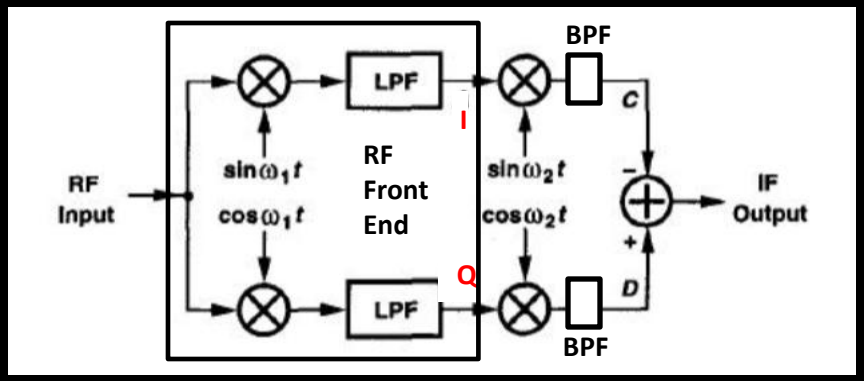

Published by D.K. Weaver 1956

Basic operation

- Use two mixers driven by two local oscillators 90 degrees out of phase to generate baseband I,Q. If these are used, with amplifiers, to drive stereo headphones, you have a binaural receiver.
- Shift their two outputs by another 90 degrees with respect to each other, either by phase shifting or by a second set of mixers/oscillators.
- The two outputs are now 180 degrees out of phase with respect to each other.
- Add or subtract these two outputs to provide the upper or lower sideband, cancelling the image

See QST, Jan 1993, "High Performance, Single Signal Direct Conversion Receivers" and QST, Mar 1999 "A Binaural Receiver" both by Rick Campbell, KK7B

Direct Conversion with image reject: SDR Receiver Block Diagrams

Direct Sampling Type – A/D samples at RF

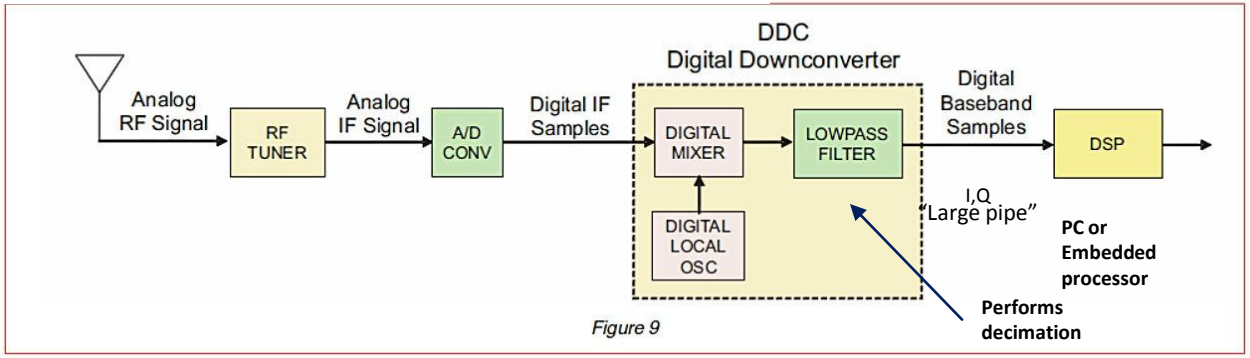

Courtesy Pentek Software Defined Radio Handbook

The "High Priced Spread" – Direct sampling with Digital downconversion

- A/D at front end at R.F., a.k.a. direct sampling. Then use digital down-conversion to baseband.
- The "Holy Grail" highest performance but costly.

Quadrature Sampling Detector (QSD) type – A/D samples at baseband

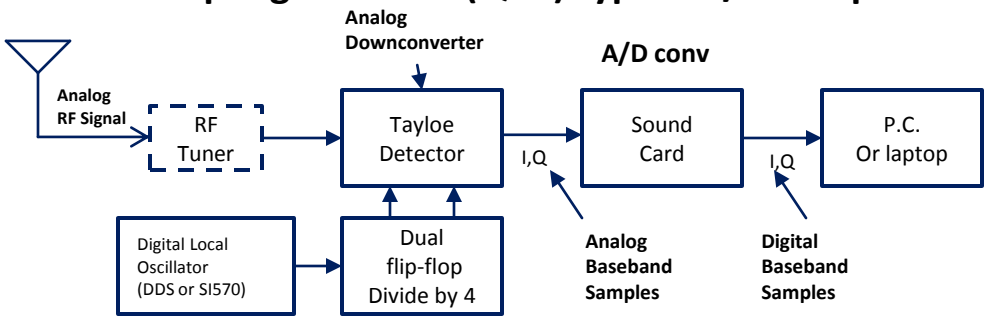

Note: An exciter is known as a quadrature sampling exciter (QSE)

The "Low Priced Spread" sampling at baseband with analog downconversion

- A/D at back end with A/D conversion done with sound card.
- low cost and works well

Direct sampling vs. QSD – a closer look

- Direct sampling
  - Typically requires field programmable gate arrays for digital down-conversion – relatively complex component and difficult to program compared to standard software
  - **Amplitude and phase balance virtually perfect – typical 100 dB + image rejection with no adjustments**
  - Displayed spectrum can be hundreds of KHz to several MHz
  - Easy to implement multiple receivers with no additional hardware
  - Typical A/D is 16 bits at 122.88 MHz. For every decrease in bandwidth by 2 with decimation, you gain 3dB in output S/N ratio. For 192KHz output bandwidth, decimation (bandwidth reduction) by 256 results in a processing gain of 24dB. So dynamic range ~ 6db/bit X 16 bits +24dB = 120dB dynamic range

- QSD
  - Image rejection dependent on analog components matching over temperature, component drift, voltage fluctuations, etc

Rejection	Phase (deg)	Amplitude (dB)
40dB	1	0.1
60dB	0.1	0.01
80 dB	0.01	0.001
100dB	0.001	0.0001

*

  - This can be improved by static or dynamic software calibrations up to about 60dB + typical (Example: "Rocky" SDR software)
  - Displayed spectrum limited by sound card bandwidth (e.g. 96 or 192 KHz)
  - 24 bit sound cards can provide ~120dB dynamic range

* Courtesy Phil Harman, VK6APH
Dayton Hamvention 2008

Analog to Digital Converter Sampling Basics

Sampling Basics

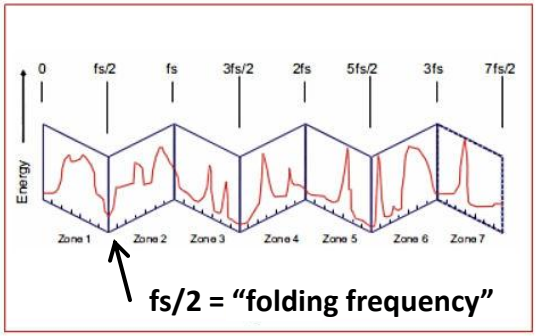

Use the vertical axis of the fan-fold paper for signal energy and plot the frequency spectrum of the signal to be sampled, as shown in Figure 2. To see the effects of sampling, collapse the transparent fan-fold paper into a stack.

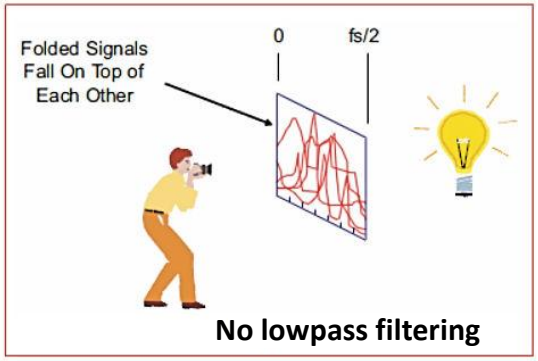

Baseband Sampling

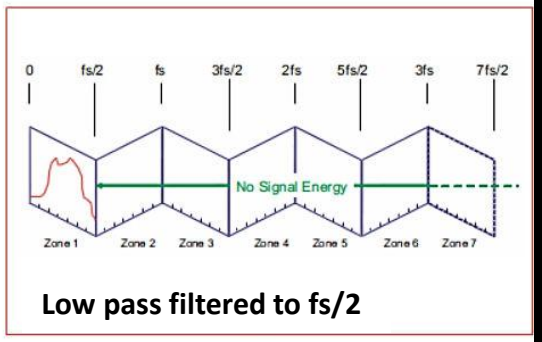

A baseband signal has frequency components that start at $f = 0$ and extend up to some maximum frequency.

To prevent data destruction when sampling a baseband signal, make sure that all the signal energy falls ONY in the 1st Nyquist band, as shown in Figure 4.

There are two ways to do this:

1. Insert a lowpass filter to eliminate all signals above $f_s/2$, or
2. Increase the sampling frequency so all signals present fall below $f_s/2$.

Note that $f_s/2$ is also known as the "folding frequency".

Courtesy Pentek - Software Defined Radio Handbook

In 1933, Harry Nyquist discovered that to accurately recover all the components of a periodic waveform, it is necessary to sample a signal at twice the maximum bandwidth of the signal being measured.

In real life, a good rule of thumb for low pass filtering for the first Nyquist zone is to use the 80% relationship:

Bandwidth = 0.8 x ƒs/2 to allow for readily achievable filtering instead of "brick wall" filtering

Seminal four-part article series on Software Defined Radio, QEX magazine 2002

- A Software Defined Radio for the Masses Part 1
- A Software Defined Radio for the Masses Part 2
- A Software Defined Radio for the Masses Part 3
- A Software Defined Radio for the Masses Part 4

Written by Gerald Youngblood, K5SDR, now CEO and President of FlexRadio Systems. In April of 2003 he founded FlexRadio Systems to market the first Software Defined Radio products to the Amateur Radio market.

SDR Receiver Software makes use of the FFT and Inverse FFT for filtering

Fists of Fourier

Courtesy garage-shoppe.com

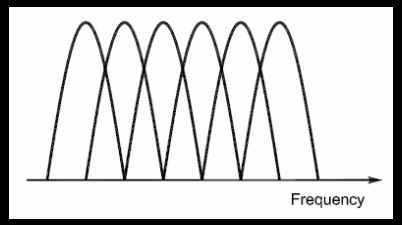

FFT output bins

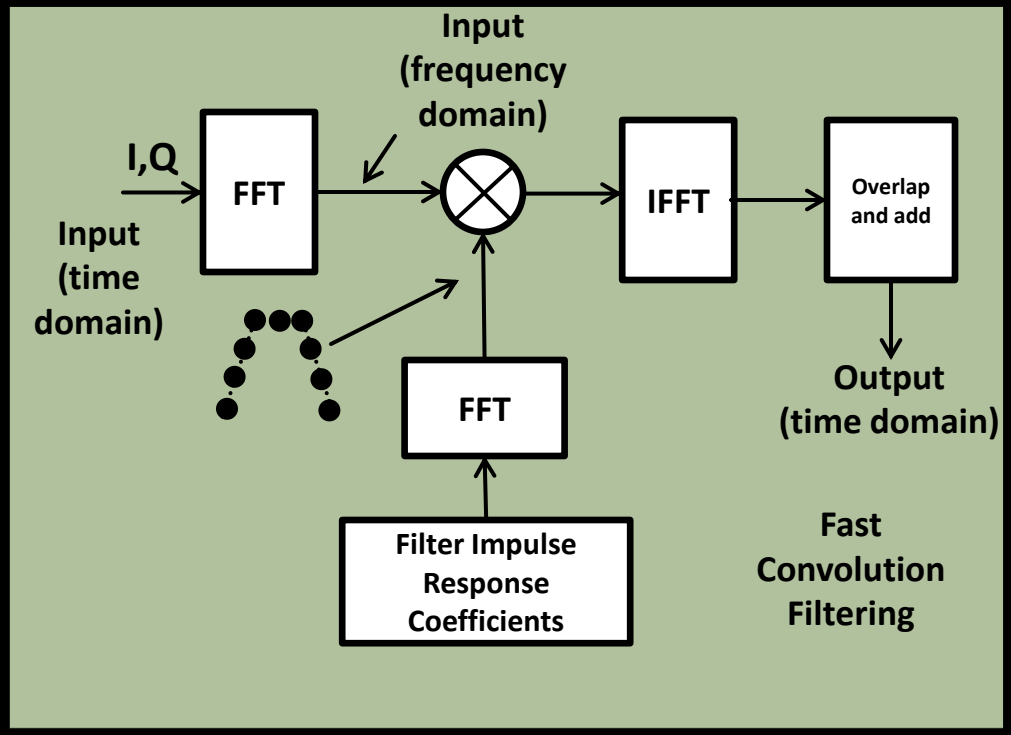

The Fast Fourier Transform (FFT) does all the heavy lifting in SDR software to implement high performance filters in place of expensive hardware filters

Examples of an SDR RF Front End UHF-SDR transceiver (QSD/QSE type)

The UHFSDR is a Software Defined Transceiver covering the 1.75 MHz to 700 MHz frequency range. A Si570 is used for frequency control. Two LVPECL 4 GHz max.flip flops produce I and Q LO signals at 1/2 the Si570 frequency. A pair of 1-1000MHz Double Balanced Mixers are used to convert signals to and from base band. A receiver pre-amp (2dB noise figure) and a transmit pre-amp(50mW max output) are provided as well as antennal switching plus provision for separate receive and transmit connections.

UHFSDR

WB6DHW.com

UHF SDR Yahoo Group

Parts cost - ~$200.00

Alan - W6ARH is selling a full kit including the PCB, Si570(1400 MHz version), and all PCB parts. Contact Alan at alan.r.hill@gmail.com. Requires external filter bank

Examples of an SDR RF Front End cont'd
New Softrock Ensemble III Receiver Kit (QSD type)
- highly recommended - for experienced builders

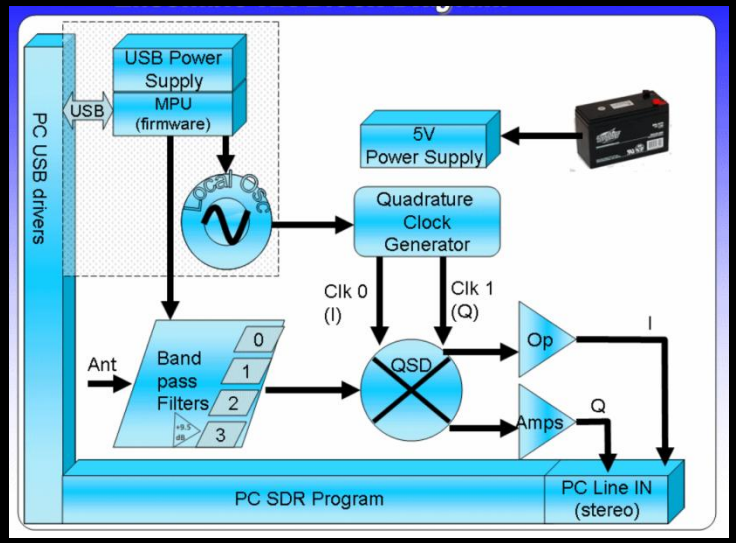

Top view

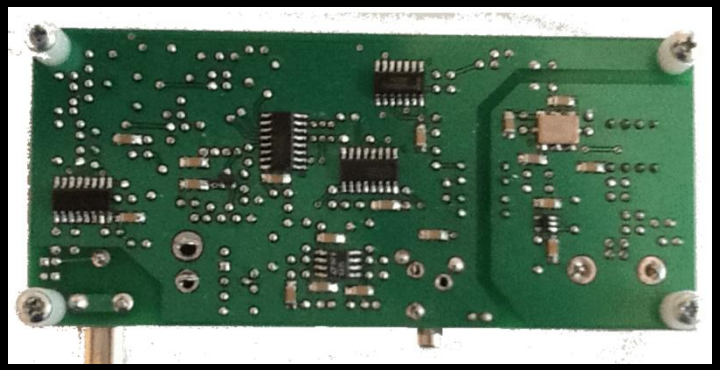

Bottom view

Available at: www.fivedash.com

Complete setup (You supply P.C. /soundcard)

Ensemble III Rx Kit	$68.00
Ensemble III enclosure	$20.00
Total	$88.00

Other SDRs available from fivedash including SDR transceivers

1.8-30 Mhz with preamp for 16-30MHz range

Examples of RF Front Ends c'd
OpenHPSDR and Apache Labs (direct sampling, large pipe)

OpenHPSDR Boards

Hermes $895

ANAN-100 HF + 6M 100W All Mode SDR Transceiver $2489

Courtesy Jon W Pawlik AE2JP

- TAPR (Tucson Amateur Packet Radio) Open HPSDR boards (upper left) were integrated into one TAPR Hermes board (upper right) for cost reduction. The power amplifier, LPF, antenna tuner/ switching board is not shown.
- An Indian company, Apache Labs, now manufactures the TAPR Hermes board, later incorporated into the ANAN-100D , and advanced spinoffs such as the Angelica board and ANAN-200 series.
- Fully packaged transceivers up to 100W also available from Apache Labs. $1679 to $4289

Basic low cost RF Front End Approach: The amazing Tayloe detector

- Invented by Dan Tayloe, Patent no. 6,230,000, May 2001.
- It has four unique properties:
  - Less than 1 db of conversion loss!!!
  - "Free" tracking bandpass selectivity (Q = 3,500 at 7 MHz), with a user definable bandwidth
  - Very high dynamic range - A high 3rd order intercept (+30 dbm).
  - An extremely compact and simple design using low cost components compared to other zero IF I-Q quadrature detectors

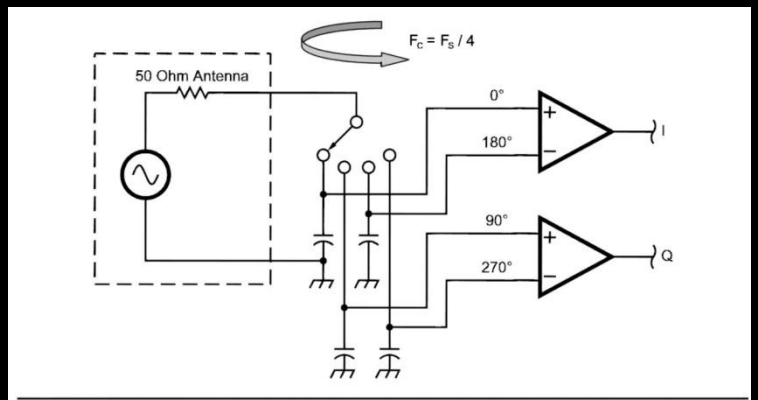

Tayloe detector: The switch rotates at the carrier frequency so that each capacitor samples the signal once each revolution. The 0° and 180° capacitors differentially sum to provide the in-phase (*I*) signal and the 90° and 270° capacitors sum to provide the quadrature (*Q*) signal.

- Conventional passive mixers generate sum and difference frequencies. Therefore, the conversion loss using an ideal mixer is at least 3 db, with a typical conversion loss of 4-6 db in practice
- The Taylor detector produces only a difference frequency!!!
- Basic design useful into the GHz range
- A.K.A. Quadrature sampling Detector (QSD)

The remarkable Human Ear

The human ear can respond to minute pressure variations in the air if they are in the audible frequency range, roughly 20 Hz - 20 kHz.

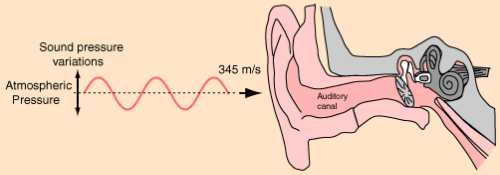

The ear has incredible sensitivity

Threshold of hearing I_0 less than one billionth of atmospheric pressure.

and an incredible power range of operation!

Threshold of pain $10^{13} I_0 = 10,000,000,000,000 I_0$

It is capable of detecting pressure variations of less than one billionth of atmospheric pressure. The threshold of hearing corresponds to air vibrations on the order of a tenth of an atomic diameter. This incredible sensitivity is enhanced by an effective amplification of the sound signal by the outer and middle ear structures. Contributing to the wide dynamic range of human hearing are protective mechanisms that reduce the ear's response to very loud sounds. Sound intensities over this wide range are usually expressed in decibels.

The human ear has about 130 dB of dynamic range. Sound cards strive accommodate this dynamic range for hi-fi applications

Why is this important? Because sound cards are designed to cover the dynamic range of the human ear and work well in meeting the dynamic range requirements of SDR at low cost

- The standard for today's audio reproduction and studio audio processing is 24 bits at 96 kbits/sec sampling rate, or even 192 kbits/sec sampling rate.
- 24 bit soundcards come in many flavors and qualities, few if any approaching the theoretical maximum dynamic range of human hearing
- Soundcard maximum theoretical dynamic range: 6.02 dB x 24 bits - 3 dB = 141.48 dB. Lets shave 20 dB off this number for worst case realism: 121 dB dynamic range. This dynamic range has undetectable distortion at normal listening levels. When applied to SDR applications, this is still an impressive dynamic range and approaches the dynamic range of the best military radios if the RF front end had perfect linearity and steps are taken to avoid noise contributing ground loops.

Recommended USB sound cards used for SDR applications

- USB sound cards recommended for greatest flexibility – can be used with multiple PCs
- Up to 192 KHz:
  - Asus Xonar U7 USB. About $80. Good set of drivers, easy to install. Dynamic range 122 dB. In production
  - Note: EMU-0202 (0204, 0404 etc) family. About $115. Excellent performance but out of production, though it can still be found
- Up to 96 KHz:
  - Syba (VIA) USB Sound Card SD-AUD20101 About $12.00! But this card requires you to set a sample offset between channels. NaP3, Skimmer and HDSDR provide this feature, and has large peak at DC and not very high performance
- See http://www.telepostinc.com/soundcards.html for others

An inexpensive SDR sampler kit (QSD based)
The Softrock Lite II combined Rx Kit for $21.00

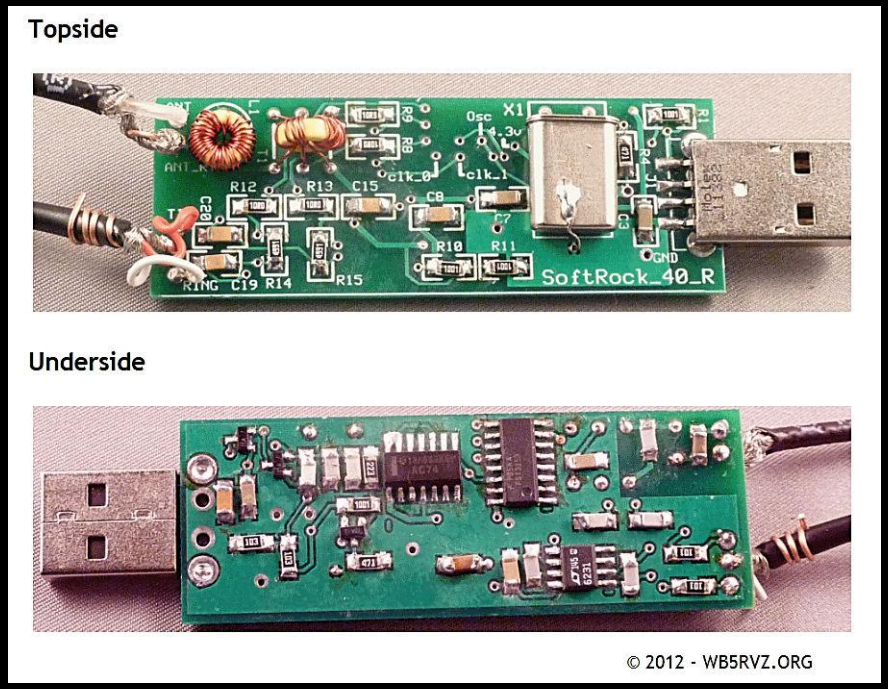

Photo courtesy WB5RVZ

Available from http://fivedash.com/

All parts provided for any one band, +/- 48KHz around center:

- 160m (approximately 1.843MHz center frequency)
- 80m (approximately 3.522MHz center frequency)
- 40m (approximately 7.056MHz center frequency
- 30m (approximately 10.125MHz 1/3 subharmonic sampled center frequency)
- 20m (approximately 14.047MHz 1/3 subharmonic sampled center frequency)

- Join yahoo group: http://groups.yahoo.com/group/softrock40/

Softrock Lite II Schematic (QSD Based)

USB power

XTAL oscillator/buffer

Bandpass filter

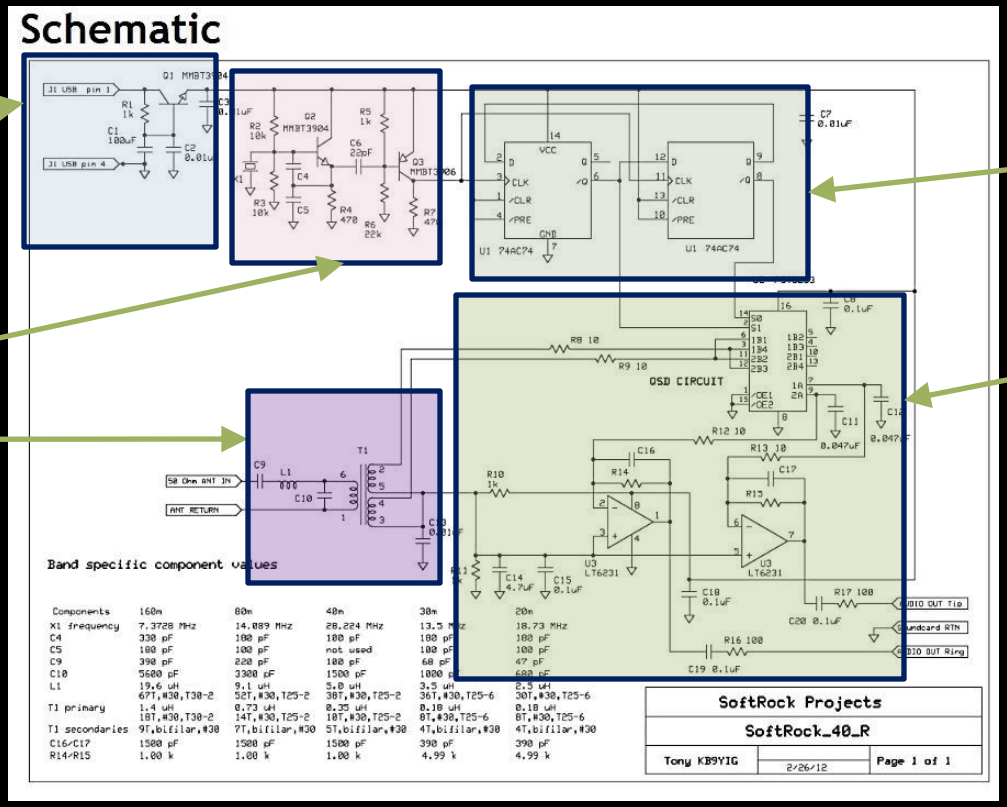

Dual flip-flop
Divide by 4

Tayloe Detector:
CMOS analog switch,
Capacitors,
Dual low noise op-amp

This is the entire schematic for a high performance single band RF Front end – Incredible!!! Representative of Tayloe detector (Quadrature Sampling Detector) - based RF front ends

Cheap and Easy SDR based on DBV-T USB dongle

Typical DVB-T dongle

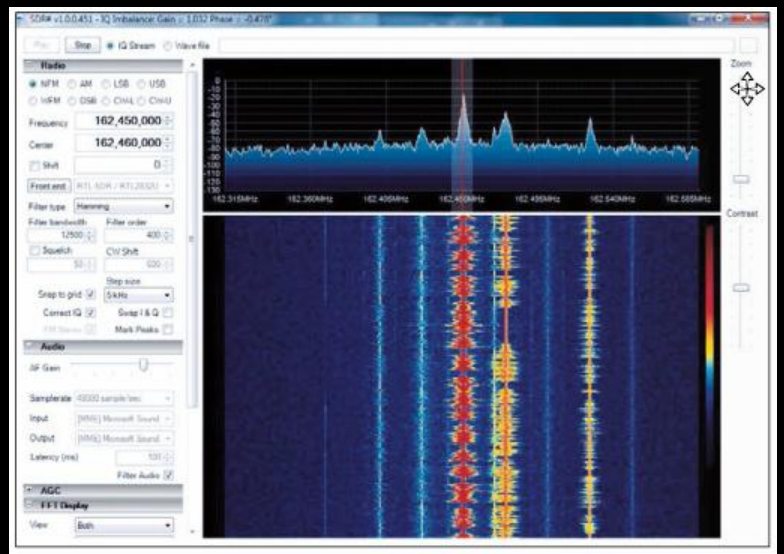

SDR# Installed screen showing broadcast FM spectrum.

- See QST January 2013, P30-31, Cheap and Easy SDR by Robert Nickels, W9RAN
- Compatible with SDR Sharp (recommended) and HDSDR software
- Covers 24 or 64 to 1700 MHz with a gap between 1100-1250)
- Receive Amateur low bands with a simple upconverter (See QST article) or purchase ready-made one such as ham it up RF upconverter. Costs $44.95
- Costs ~#15-20 dollars. Example here
- Requires "PAL Male to F Female" adapter such as Radio Shack 278-261 or cut off antenna cable and add your own connector
- Note: has limited dynamic range (~ 48dB) due to only 8 bit A/D sampling

Courtesy cheap and easy SDR by Robert Nickels, W9RAN

SDR-based 0-1.7 GHz Spectrum Analyzer: Make your own for <$65.00!

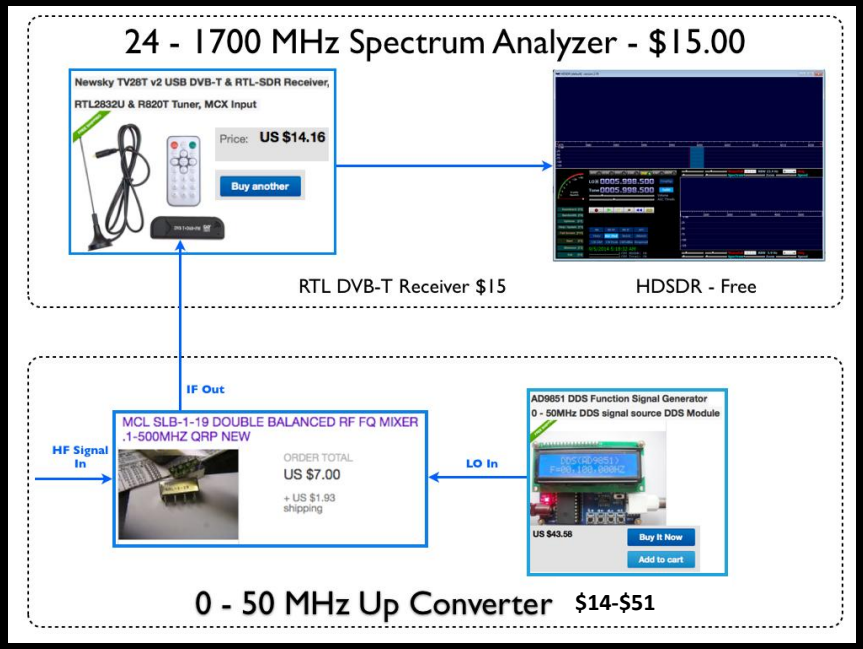

- Basic 24-1700MHz for <$15 using HDSDR
- Add the converter section for $44 to extend coverage down to DC. Upconverter will work with any 25 MHz or higher oscillator that has +7 dBM or output. A cheap 27 MHz XTAL oscillator instead of DDS can be found here or use a cheap programmable oscillator like the SI510 available from Digikey.com

- See spectrum up to 3.8 MHz at once with resolution bandwidth of 0.7 Hz!
- Test and confirm your intermod and spurious signals just like the big guys with a freeware 2-tone generator app like this one
- All parts readily available on ebay.
- It seems to good to be true..... it is not! This really works and works well!
- Dongle should have "DVB-T" or "DVB-T2" capabilities and use the RTL chipset . Example here
- Note: has limited dynamic range (~ 48dB) due to only 8 bit A/D sampling but still useful

Courtesy Warren Allgyer, 9V1TD

Hermes Lite SDR Transceiver under development (Direct sampling large pipe)

- Prototype RF front end using Analog Devices AD9866 12 bit broadband transceiver
- See Github repository for more information
- May be seen on the internet using QT Radio

Project Goals

- 0-30MHz (HF) transceiver with good performance
- Entirely open source and open hardware design
- Cost of less than $150 (cost includes FPGA board) for hobbyist who build their own
- Maintain enough compatibility with Hermes to use existing Hermes SDR front-end software with no or minor modification

“We don’t need no Stinkin’ PCs”

- Several companies or amateur radio groups have developed self-contained SDR transceivers that don’t use PCs.
- They are based on very low cost DSP microcomputers that have significant digital signal processing capabilities, used in conjunction with low cost audio CODECs and a low cost programmable oscillator.

- Example: Microchip dsPIC33FJ128MC804 “Digital Signal Controller”. Cost ~$6 qty 1. 40MIPS, I2C, ADC and DAC, PIO
- Low cost helper chips:
  - TI audio codec TLV320AIC3204IRHB
  - Silicon Labs Si570 10 Mhz TO 1.4 Ghz I2C Programmable XO/VCXO

- There is also the first ever standalone digital modem, the NUE-PSK, a digital modem for PSK31 and RTTY field use ... without a PC!

- Latest high end SDR transceivers use large FPGAs and high performance signal processors to do all processing except graphical user interface via PC/tablet/smartphone over “thin client” ethernet interface

“We don’t need no Stinkin’ PCs”

SDR2GO

kit ~$70.00
Austin QRP club
See Austin Summerfest 2010

SDR Cube Transceiver

The SDR Cube Transceiver. Housed in a 4” x 4” x 4” black powder-coated aluminum enclosure, this self-contained Software Defined Radio couples with a Softrock RF front end to perform as a full-featured SSB and CW transceiver for the HF bands. The Cube design contains a full user interface, DSP processing, I/O connectors on the rear panel, and 27 in³ shielded space internally for a Softrock. The Cube ideally interfaces to the NUE-PSK modem for digital mode support, and future growth will directly encompass digital modem functions and more. What a great way to eliminate the complexities and vagaries of using the PC as a radio!

www.sdr-cube.com
Overview slides
Complete kit $424

STM32-SDR

The STM32-SDR is a hardware and software project that takes a STM32 DSP processor and adds a 3.2” TFT display and some user controls which allows you to use a SDR radio like an Ensemble RXTX without a PC. $345 for pcb, cables, enclosure, TFT display

All of these require external baseband IQ transceiver like the Ensemble RxTx and are hobbyist type requiring kit building experience

“We don’t need no Stinkin PCs”
Elecraft KX3 (QSD/QSE type)–High volume commercial QRP SDR rig

KX3 Self-contained operation

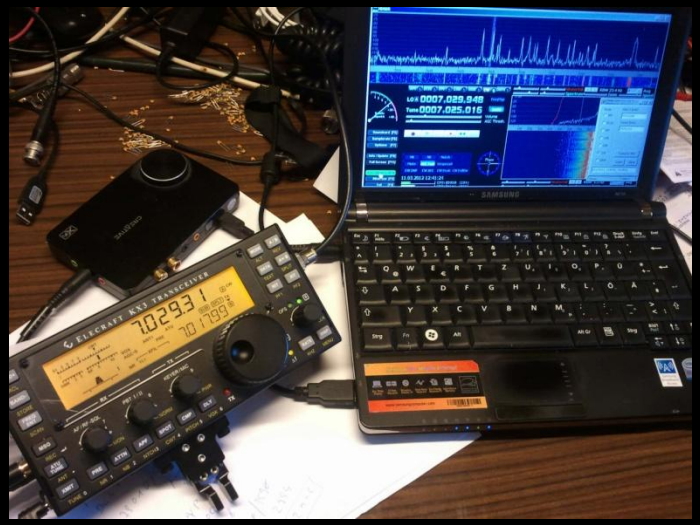

Audio out to soundcard/PC
For use with 3rd party software for SDR apps and digital modes

- 160-6 meters, SSB/CQ/DATA/AM/FM modes
- 10W PEP (100W with KXPA 100 amp)
- Only 1.5 pounds (0.7Kg)
- Current drain as low as 150 mA on receive
- Ultra compact portable/mobile/home
- Internal 8 - AA battery holder
- Receiver performance rivals that of the best conventional transceivers
- Base price $899 kit, $999 assembled. Many options and accessories available

“We don’t need no Stinkin PCs” ELAD FDM Duo SDR Transceiver (Direct Sampling large pipe type)

Main specs:

- RX 10KHz to 54 MHz direct sampling
- Tx 160M-6M power output 5W
- Standalone modes: CW, SSB, AM
- PC mode – up to 6MHz bandwidth
- Dual mode – 192 KHz bandwidth

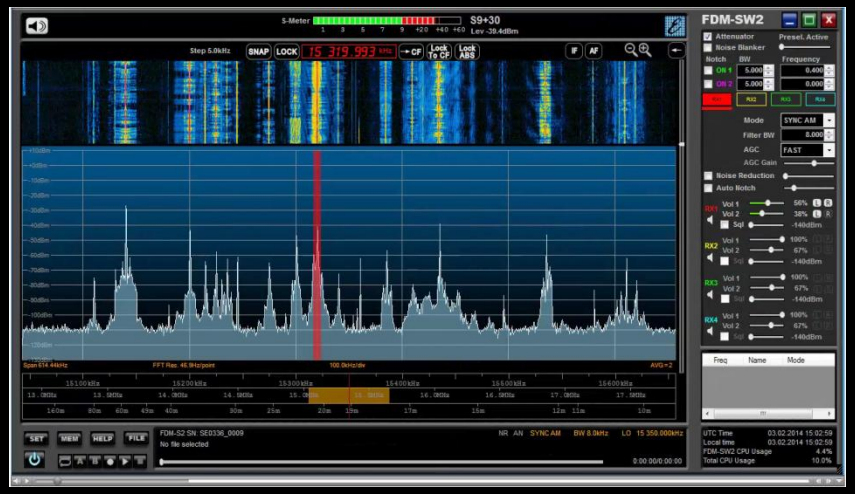

ELAD FDM-S2 screenshot
See sample wav files, how-to and apps DK8OK folder

- Standalone or use with P.C.
- $1280.00 at current exchange rate
- See website for add’l info
- Receiver only: ELAD FDM S-2 $580.00 HF, FM, and VHF, 4 virtual receivers

Flex 6000 Signature Series – Latest from Flex Radio
Flex 6300 $2499, Flex 6500 $4299, Flex 6700 $7499

Note: $199 major software version upgrades

- 2-8 receiver channels
- Max panadapter bandwidth 7-14 MHz
- Freq coverage up to 30 kHz - 72 MHz; 135 - 165MHz
- "Thin client" output via Gbit Ethernet
- Client/server architecture
- Open API – lets anyone develop custom GUIs
- Open API allows access to internal signal processing
- GPS disciplined oscillator option in Flex 6500 and 6700

For additional information see:

Flex Radio at the 2014 Digital Communication Conference, Austin TX Part 1
Flex Radio at the 2014 Digital Communications Conference, Austin Tx Part 2
Courtesy of Ham Radio Now taped by Gary Pierce KN4AQ

Key benefits of fully integrated baseband processor like that in Flex 6000 series

- Self-contained rapid startup. No long bootup times
- Eliminates integration of soundcard, software packages
- Spectrum display independent of computer performance (though computer still needs good graphics capability)
- Promotes use of “Thin client” architecture by just sending display information, not wideband I,Q video to pc, smartphone, tablet, or internet
- Promotes remote operation via low bandwidth use of Ethernet using client/server architecture

We don't even need no stinkin' hardware!!

- Latest SDRs are moving to client-server architectures
- Get on the internet and use someone else's Antennas and RF baseband converter!!

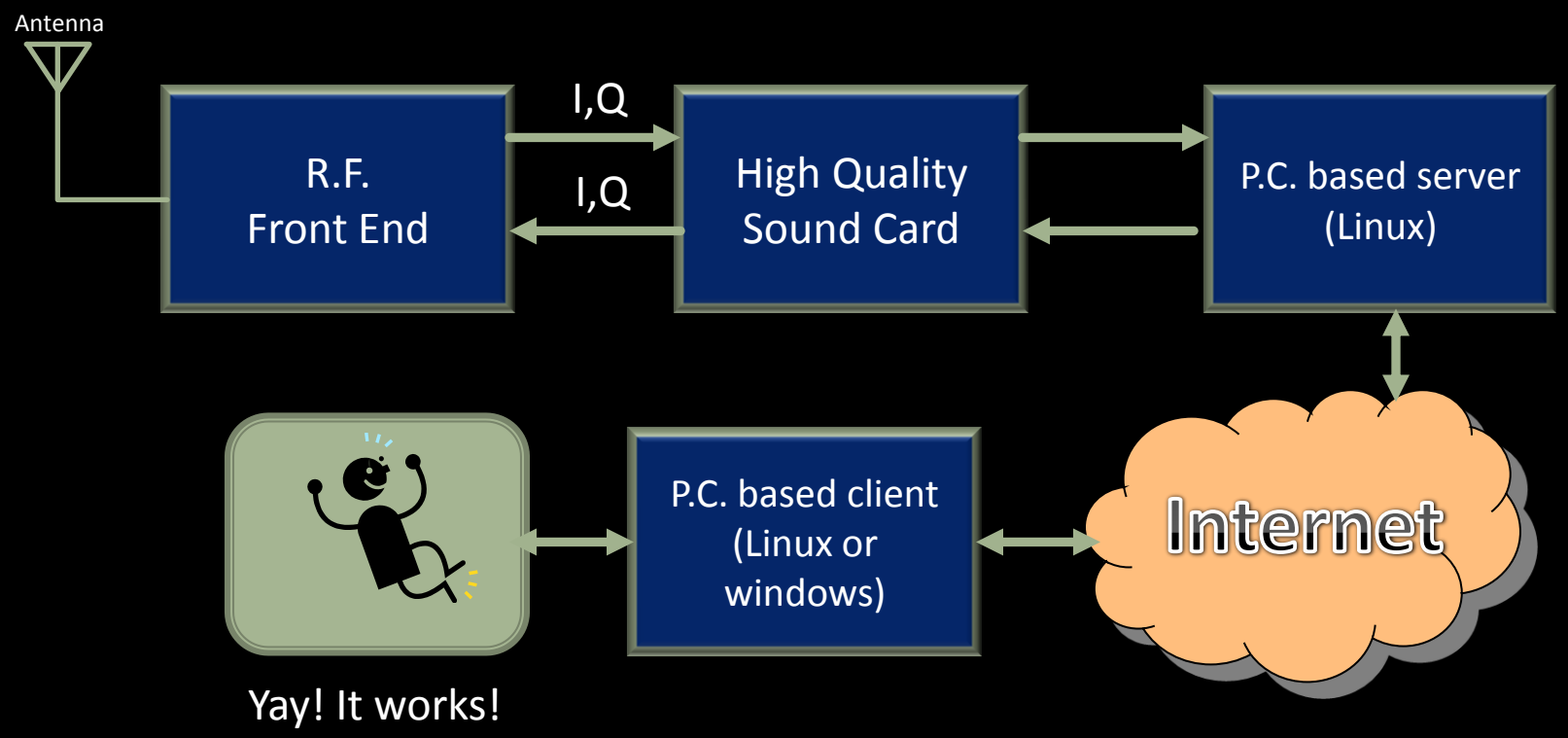

Log in to a remote server from your windows PC or laptop for free!!

- Internet-based: No software required!!: www.websdr.org

- More sophisticated but requires software download; Go to the following link for description: http://napan.ca/ghpsdr3/index.php/QtRadio_on_Windows
- Download a zipped executable at: http://napan.com/ve9gj/qtradio-master.zip
- Load to a new folder and extract contents
- Run QTRdio.exe. Allow access if windows firewall blocks or only provides limited access
- Click on Receiver /Configure and select audio card
- Click on Receiver/Quick server list, highlight a server and connect (try different ones, some are more capable than other, some may not be operating)
- You can now control the other person's radio over the internet!!
- See QT radio screenshots and youtube videos here
- There is also an Android Client for SDR servers!!

QT Radio screenshot

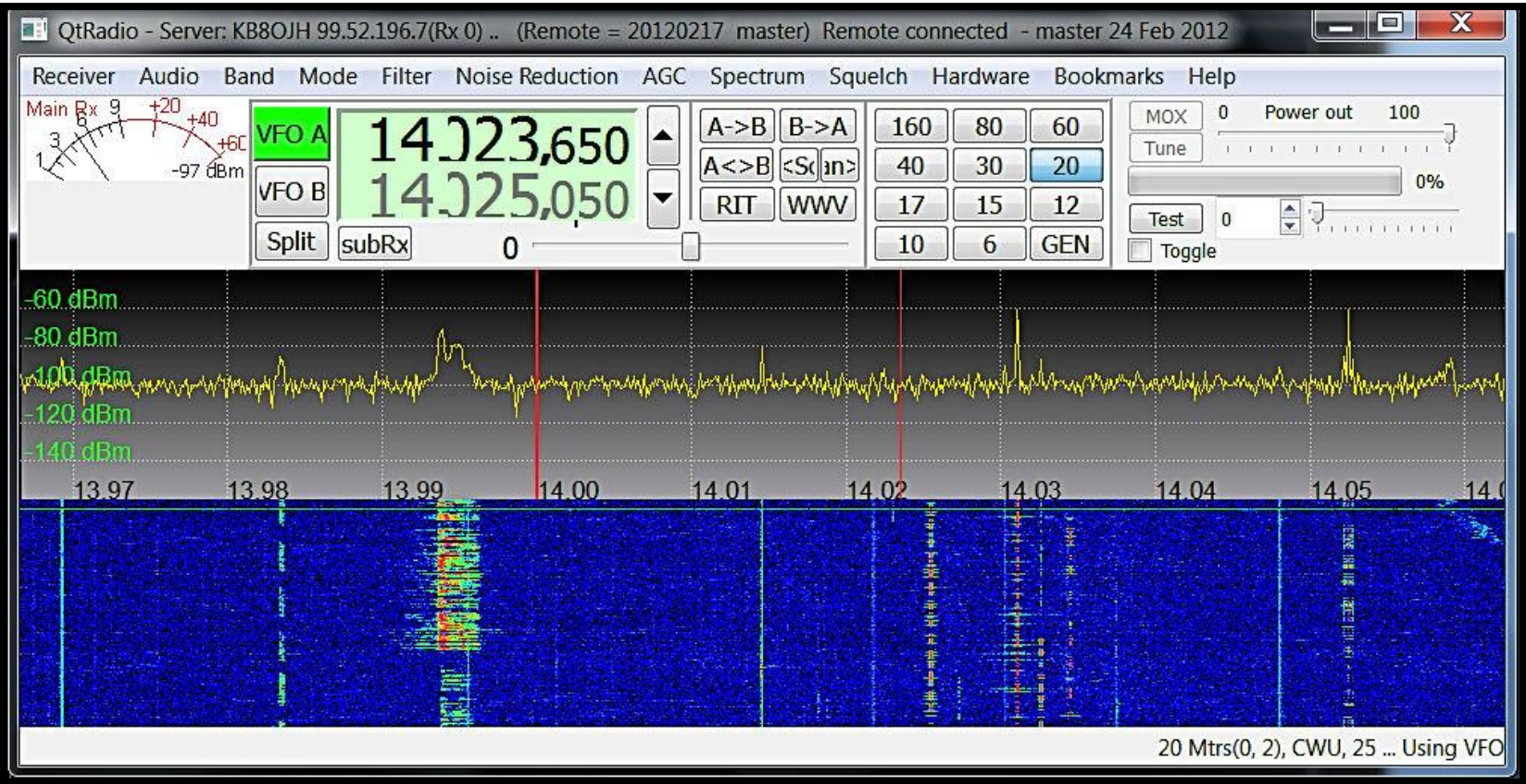

You can select band, tune it with your mouse scroll wheel or drag, select operating mode, look at received signal strength on S-meter, set control parameters, etc
Pretty cool to let you try SDR with just a PC and internet connection

Digital Modes
- So many modes, so little time

- PSK31, PSK63, SSTV, HD SSTV, RTTY, MFSK16, MFSK32, MT63, Hellschreiber, Olivia, Packet, PACTOR , Throb, Contestia, JT6M, Ham DRM, Domino, DominoEX, DominoF, WSPR, ROS, SITOR, SITOR-A, SITOR-B, Swedish ARQ, Clover, CHIP, ALE, PAX, PAX-2, STANAG, HFDL, NAVTEX, SYNOP, COQUELET, AOR, WinDRM….
- Between amateur and commercial services, there are tens of modes, perhaps approaching 100!!!

Courtesy George Heron, N2APB

Digital mode encoding and decoding can be considered a subset of software defined radio

SDR evolution

- IQ baseband front end with processing performed in PC. Using either audio or USB interfacing
- Updated PC interface to Ethernet promoting client/server architecture
- Processing self-contained in the SDR transceiver simplifying system integration and "thin client" output where PC is no longer responsible for signal processing
- Transmitter Improvements:
  - Increased use of SDR baseband digital pre-distortion for cleaner SSB transmission. See this presentation for additional information. Developed by Dr. Warren Pratt, N9OV, winner of the ARRL 2014 ARRL Technical Innovation Award for Pure Signal.
  - Envelope Tracking for high transmit efficiency
  - See Nov/Dec 2014 QEX article "Controlled Envelope Single Sideband by David L. Hershberger, W9GR
    - Average power increase of about 80% or 2.56dB with no significant audible artifacts
    - Eliminates the need for ALC
    - Algorithm is free to use by all. First implemented by Flex Radio.

Pure Signal Digital Pre-distortion
Overview and Example Application and Results

Amplitude correction via pre-distortion

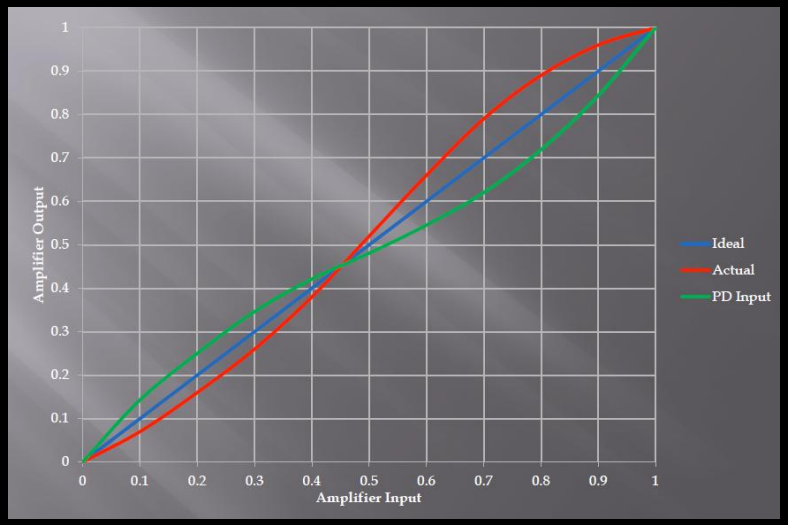

2 meter very non-linear amplifier

Puresignal results – courtesy Clyde K2UE and Dr. Warren Pratt, N9OV Pacificon 2014

Envelope Tracking Overview
PA supply voltage tracks the R.F. envelope

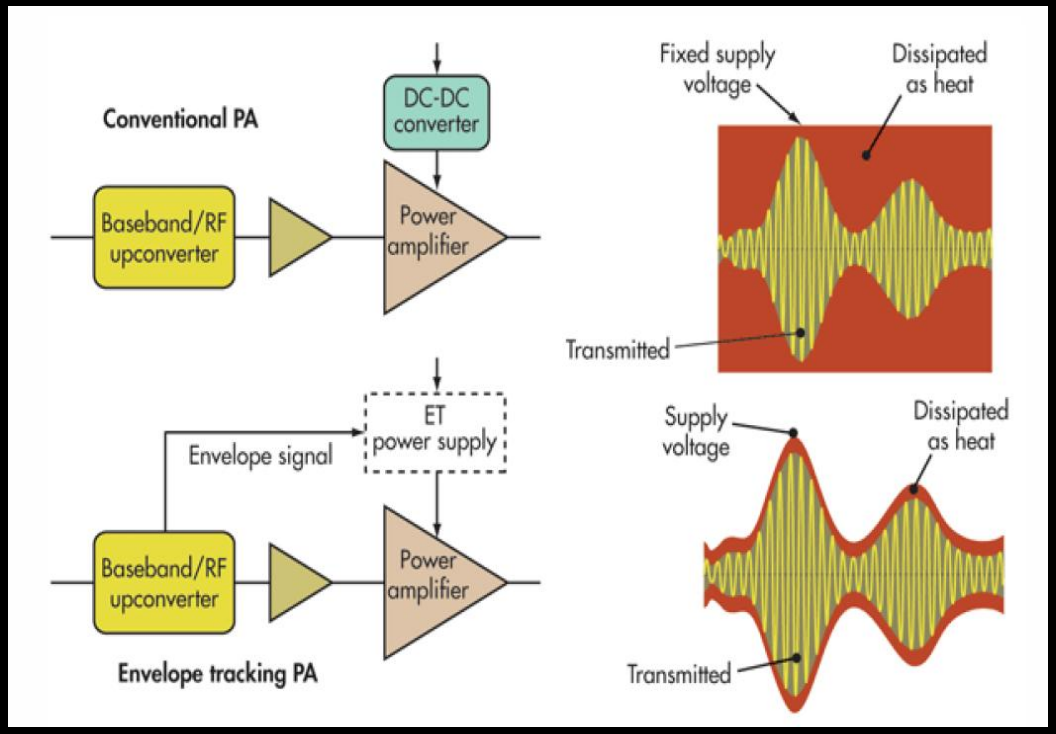

•Depending on amplifier efficiencies >80% can be achieved!

Advantages:
· Provides best performance at all power levels.
· Permits broadband operation.
· Provides additional advantages in terms of operation into mismatched loads, etc.

Disadvantages:
· Envelope tracking requires very fast – high bandwidth - power supply.
· Requires accurate envelope signal for power supply

Courtesy DC6NY, Helmut F. Oeller

SDR Evolution – the future

- Likely use of multi-engine graphics cards and CUDA or openCL programming to perform all the signal processing eliminating the need for FPGA coding. OpenHPSDR group experimenting with Jetson board for $192. Graphics cards are already used commercially for image processing such as video editing/rendering.
  - Realtime FFT of full DC-6M spectrum has been demonstrated by OpenHPSDR group
  - Could, in the future, allow multiple users to remotely log in and view different parts of the HF spectrum simultaneously
- Multiple phase synchronized receivers and transmitters will allow digital beamforming on receive and transmit using multiple antennas for relative phasing between antennas
- Cognitive radio evolution: Want to find your buddy but don't know what band or mode he/she is on? Cognitive radio will be able to find that operator.

Amateur radio astronomy

- Amateur Radio Astronomy is a hobby that combines mechanical, electrical, electronic, radio frequency, astronomy, physics, math, and software challenges. Some proficiency is required in all of the areas in order to obtain meaningful results.
- Significant radio astronomy frequencies recognized at the 1979 WARC conference:

Frequency range	Used for
13.36-13.41 MHz	Solar and Jupiter observations
25.55-35.67 MHz	Solar and Jupiter observations
73.00-74.60 MHz	Pulsar detection
150.05-153.00 MHz	Pulsar detection
406.10-410.00 MHz	Pulsar detection
1400.0-1427.0 MHz	Hydrogen line astronomy

Courtesy SETI league

Hydrogen line amateur astronomy

- The hydrogen line or 21 centimeter line refers to the electromagnetic radiation spectral line that is created by a change in the energy state of neutral hydrogen atoms. This electromagnetic radiation is at the precise frequency of 1420.40575177 MHz (as modified by doppler shift)
- The microwaves of the hydrogen line come from the atomic transition between the two hyperfine levels of the hydrogen 1s ground state
- Those radio waves can penetrate the large clouds of interstellar cosmic dust that are opaque to visible light. They can easily pass through the Earth's atmosphere and be observed from the Earth with little interference.
- The 21 cm line (1420.4 MHz) was first detected in 1951 by Ewen and Purcell at Harvard University
- After 1952 the first maps of the neutral hydrogen in the Galaxy were made and revealed, for the first time, the spiral structure of the Milky Way

Courtesy Wikipedia

Representative low cost SDR-based Amateur Radio Astronomy Hydrogen line telescope

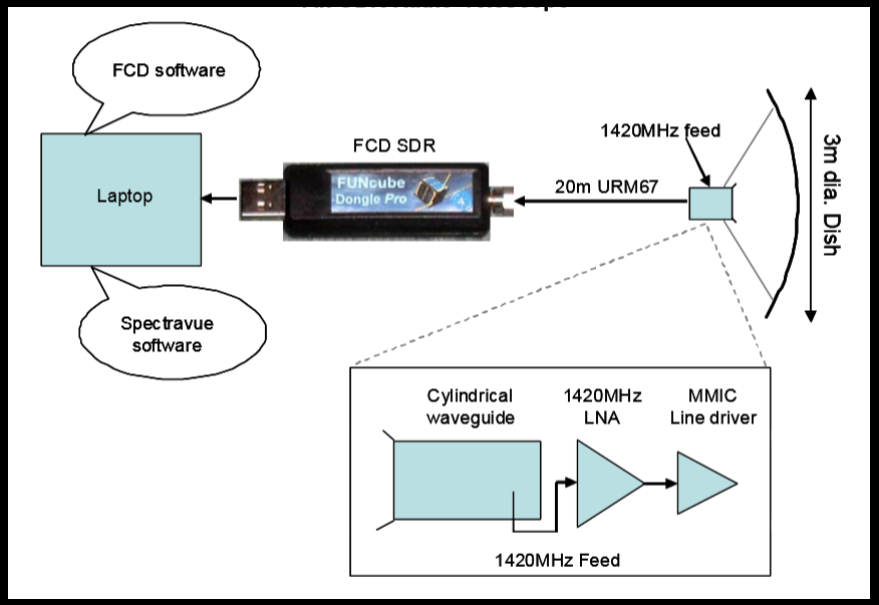

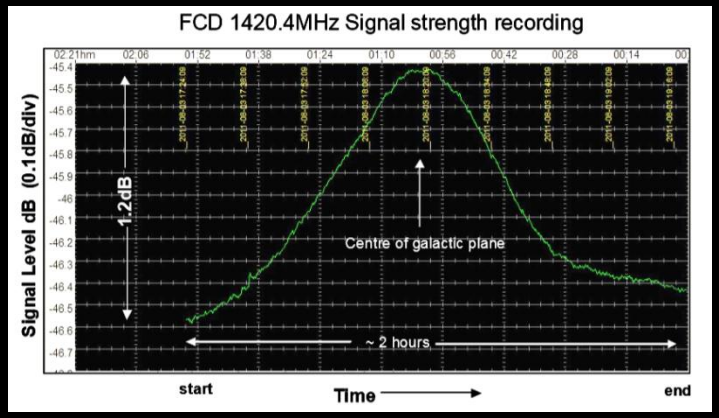

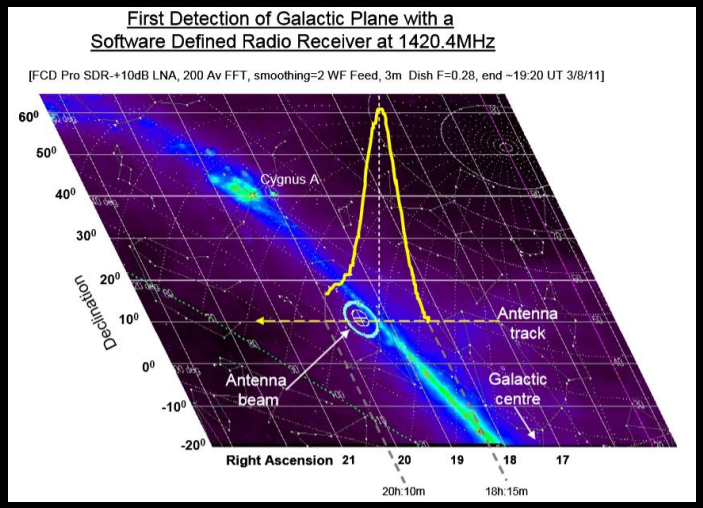

Software used:
- Funcube dongle Pro+ Interface software
- Spectravue
- Radio Eyes (free with limitations)

See "An SDR Radio Telescope" for more details

And Now for Something Completely Different

Demo: HDSDR live using recorded IQ files. Try it yourself at home!

How to run HDSDR on your Windows PC/laptop/netbook/tablet using recorded files!

- Download HDSDR from http://www.hdsdr.de/index.html
- Follow installation instructions at: https://sites.google.com/site/g4zfqradio/installing-and-using-hdsdr
- Download CW .wav IQ files from: http://data.home.ict.nl/fredkrom/IQData/ or a SSB and CW .wav files from: http://www.dk3qn.com/wfSDRwav.htm
- Run HDSDR. You will get an error dialog USB device not connected or wrong manufacturer. Close the error dialog box by clocking OK.
- Click on the Soundcard button and select your RX output (to speaker) soundcard
- Click on the "Play" button on the recorder controls, which will open a dialog box for opening an IQ .wav file. Select one
- Select appropriate mode. Tune around, play with controls. You can loop the recorded file by clicking the "loop" button on the recorder controls.
- To open another file, hit stop, then play on the recorder controls.
- See the second link above for more info on using HSDSR

Reference Links

SDR Reference Links

- HDSDR (former WinradHD) is an advanced version of Winrad, developed by Alberto, I2PHD
- Installing and using HDSDR
- SDR Sharp a simple, small and fast PC-based DSP application for Software Defined Radio
- CW and SSB .wav IQ files from DK3QN that can be played back with SDR software like HDSDR
- CW contest .wav IQ files software from Fred Krom (pe0fko) that can be played back with SDR software like HDSDR
- Product reviews: Flex 6700 and Anan 100-D
- AB4OJ User reviews and test reports
- Includes good discussion of how phase noise affects A/D converter S/N ratio
- More information on Envelope Tracking
- Signals, Samples and Stuff, a DSP tutorial parts **1**, **2**, **3**, and **4** QEX Mar April 1998
- Comparison of "conventional", "DDC based" and "soundcard based" receivers
- Quadrature Signals, complex, not complicated on the DSPGURU.com site
- Soundcard SDR Software
- Software Defined Radio Explained – Fists of Fourier Parts **1**, **2**, **3**, **and** **4** explains how the QSD detector works
- Virtual Audio Cable software by Eugene Muzychenko [$35]
- VSP manager by Steve Nance - virtual com port software, free but requires amateur radio call sign)
- FLDIGI digital mode software
- Digipan for PSK31 and PSK63
- Ham Radio Deluxe, a widely used comprehensive program suite for CAT control, and digital modes
- MultiPSK digital mode software
- Using DVB-T dongles for cheap SDR
- Installing ghpsdr3-alex to run the Softrock Ensemble II by N8MDP

Reference Links cont'd

SDR Reference Links cont'd

- Introductory SDR presentation by G8VOI and G4XZL
- SDR presentation by Jon Pawlik – AE2JP contains many useful links
- Explanation of negative frequencies
- Choosing a Transceiver Far from Simple by Rob Sherwood - a great read if in market for a new rig
- Receiver Performance Transmitted BW Contest Fatigue. by Rob Sherwood
- User reviews and test reports by Adam Farson, VA7OJ/AB4OJ
- H.F. Receiver Testing, Issues and Advances by Adam Farson, VA7OJ/AB4OJ
- Noise Power Ratio Testing of H.F. Receivers by Adam Farson, VA7OJ/AB4OJ
- Flex 6700 review by Adam Farson, VA7OJ/AB4OJ
- Hamsdr.com for hams interested in sharing information in SDR. See download section for presentations
- Phil Harman , VK6APH at Dayton Hamvention 2008 discussing fully digital H.F. radios

Radio Astronomy Reference Links

- ARRL publication **Amateur Radio Astronomy**
- **Hydrogen Line** discussion from Wikipedia
- RTLSDR-based, Software Defined Radio Alternative to Switched Radiometers for Continuum Radio Astronomy
- Hydrogen Line Receiver using FunCube or RTL2832U USB Dongles
- How to begin in radio astronomy
- A 21cm Radio Telescope for the Cost-Conscious
- **Radiometers**
- **Experiments with a Software Defined Radio Telescope**
- **Significant radio astronomy frequencies**
- **Radio Jove** – NASA solar and planetary observations for schools. Build your own radio telescope from an inexpensive kit ($210.00) and/or use remote radio telescopes through the internet
- A 20.1 MHZ Intereferometric Radio Telescope for Observation of the Sun and Jupiter
- Amateur Pulsar Observations